DATASHEET

4 PIN LONG CREEPAGE SOP PHOTOTRANSISTOR PHOTOCOUPLER EL101X-G Series

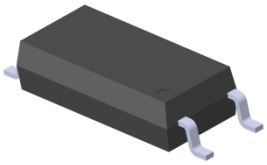

Schematic

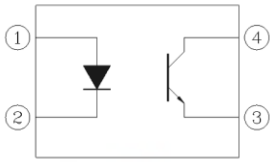

Pin Configuration
1. Anode
2. Cathode
3. Emitter
4. Collector

Features:

- Compliance Halogen Free
  (Br < 900 ppm, Cl < 900 ppm, Br + Cl < 1500 ppm)
- Current transfer ratio
  (CTR: 50~600% at I_F = 5mA, V_{CE} = 5V)
  (CTR: 63~320% at I_F = 10mA, V_{CE} = 5V)
- High isolation voltage between input and output (Viso =5000 V rms)
- Compact 4 Pin SOP with a 2.1 mm profile
- Compliance with EU REACH
- 8mm long creepage distance
- The product itself will remain within RoHS compliant version
- UL and cUL approved (No. E214129)
- VDE approved (No. 40028391)
- SEMKO approved
- NEMKO approved
- DEMKO approved
- FIMKO approved
- CQC approved

Description

The EL101X-G series devices consist of an infrared emitting diode, optically coupled to a phototransistor detector.
Compound use free halogens and Sb_2O_3.
They are packaged in a 4-pin SOP package

Applications

- Programmable controllers
- System appliances, measuring instruments
- Telecommunication equipments
- Home appliances, such as fan heaters, etc.
- Signal transmission between circuits of different potentials and impedances

Copyright © 2010, Everlight All Rights Reserved. Release Date: Otc 19, 2018. Issue No: DPC-0000037 Rev.9

Ver.:9 Release Date:10/31/2018 狀態:Approved(正式發行)

Absolute Maximum Ratings (Ta=25℃)

Parameter		Symbol	Rating	Unit
Input	Forward current	I_F	60	mA
	Peak forward current (1us, pulse)	I_{FP}	1.5	A
	Reverse voltage	V_R	6	V
	Power dissipation	P_D	100	mW
Output	Power dissipation	P_C	150	mW
	Collector current	I_C	50	mA
	Collector-Emitter voltage	V_{CEO}	80	V
	Emitter-Collector voltage	V_{ECO}	7	V
Total Power Dissipation		P_{TOT}	250	mW
Isolation Voltage*1		V_{ISO}	5000	Vrms
Operating Temperature		T_{OPR}	-55 to 110	°C
Storage Temperature		T_{STG}	-55 to 125	°C
Soldering Temperature*2		T_{SOL}	260	°C

Notes
*1 AC for 1 minute, R.H.= 40 ~ 60% R.H. In this test, pins 1, 2 are shorted together, and pins 3, 4 are shorted together.
*2 For 10 seconds

Copyright © 2010, Everlight All Rights Reserved. Release Date: Otc 19, 2018. Issue No: DPC-0000037 Rev.9
Ver.:9 Release Date:10/31/2018 狀態:Approved(正式發行)

Electro-Optical Characteristics (Ta=25℃ unless specified otherwise)

Input

Parameter	Symbol	Min.	Typ.	Max.	Unit	Condition
Forward Voltage	V_F	-	1.45	1.5	V	I_F =50mA
Reverse current	I_R	-	-	10	μA	V_R = 6V
Input capacitance	C_{in}	-	50	-	pF	V = 0, f = 1kHz

Output

Parameter	Symbol	Min	Typ.	Max.	Unit	Condition
Collector-Emitter dark current	I_{CEO}	-	-	100	nA	V_{CE} = 20V, I_F = 0mA
Collector-Emitter breakdown voltage	BV_{CEO}	80	-	-	V	I_C = 0.1mA
Emitter-Collector breakdown voltage	BV_{ECO}	7	-	-	V	I_E = 0.1mA

Transfer Characteristics

Parameter		Symbol	Min	Typ.	Max.	Unit	Condition
Current Transfer ratio	EL1010	CTR	50	-	600	%	I_F = 5mA ,V_{CE} = 5V
	EL1017		80	-	160		
	EL1018		130	-	260		
	EL1019		200	-	400		
	EL1012	CTR	63	-	125	%	I_F = 10mA ,V_{CE} = 5V
	EL1013		100	-	200		
	EL1014		160	-	320		
	EL1012		22	-	-		I_F = 1mA ,V_{CE} = 5V
	EL1013		34	-	-		
	EL1014		56	-	-		
Collector-Emitter saturation voltage		$V_{CE(sat)}$	-	-	0.3	V	I_F =10mA ,I_C = 1mA
Isolation resistance		R_{IO}	5×10^{10}	-	-	Ω	V_{IO} = 500Vdc, 40~60% R.H.
Floating capacitance		C_{IO}	-	-	1.0	pF	V_{IO} = 0, f = 1MHz

Copyright © 2010, Everlight All Rights Reserved. Release Date: Otc 19, 2018. Issue No: DPC-0000037 Rev.9
Ver.:9 Release Date:10/31/2018 狀態:Approved(正式發行)

Transfer Characteristics

Parameter	Symbol	Min	Typ. *	Max.	Unit	Condition
Turn on time	Ton	-	4	-	μs	V_{CE} = 5V, I_C = 5mA, R_L = 100Ω
Turn off time	Toff	-	3	-		
Rise time	t_r	-	-	18	μs	V_{CE} = 5V, I_C = 5mA, R_L = 100Ω
Fall time	t_f	-	-	18		

* Typical values at T_a = 25°C

EVERLIGHT

Copyright © 2010, Everlight All Rights Reserved. Release Date: Otc 19, 2018. Issue No: DPC-0000037 Rev.9
Ver.:9 Release Date:10/31/2018 狀態:Approved(正式發行)

Typical Electro-Optical Characteristics Curves

Figure 1. Forward Current vs Forward Voltage

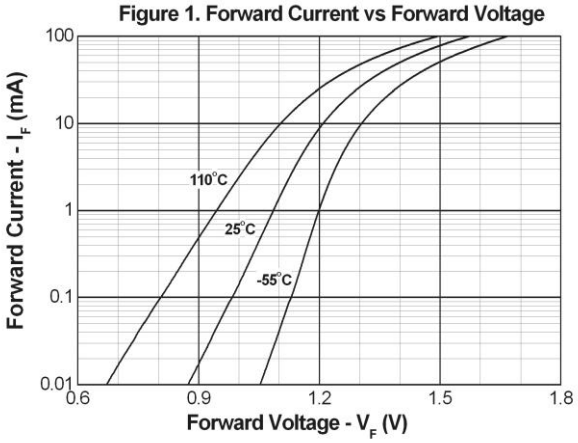

Figure 2. Dark Current vs Ambient Temperature

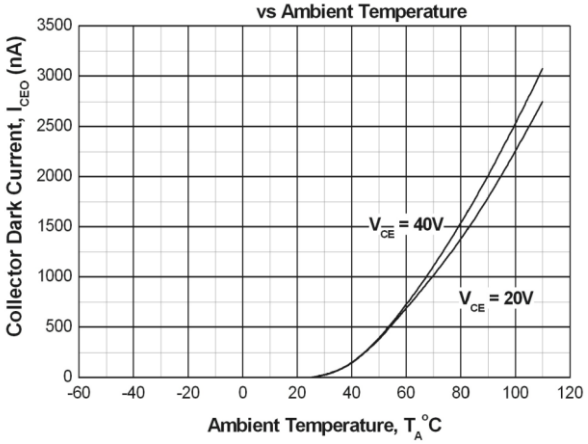

Figure 3. Collector Current vs. Collector Emitter Voltage

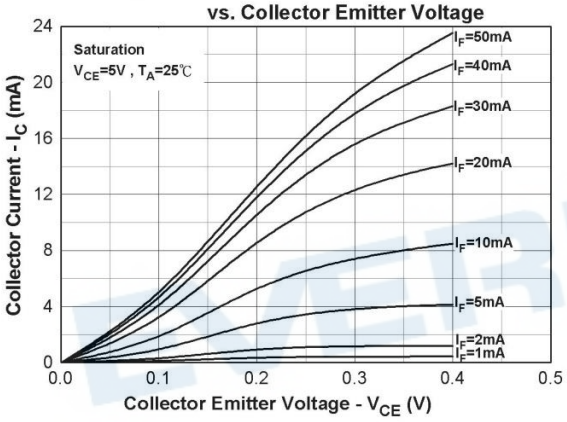

Figure 4. Collector Current vs. Collector Emitter Voltage

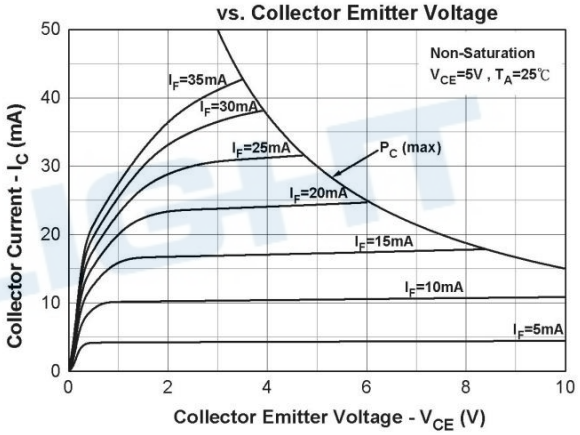

Figure 5. Normalized Collector Current vs. Forward Current

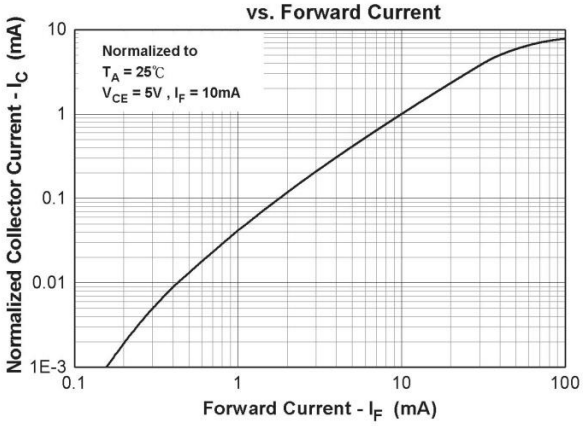

Figure 6. Normalized Current Transfer Ratio vs. Forward Current

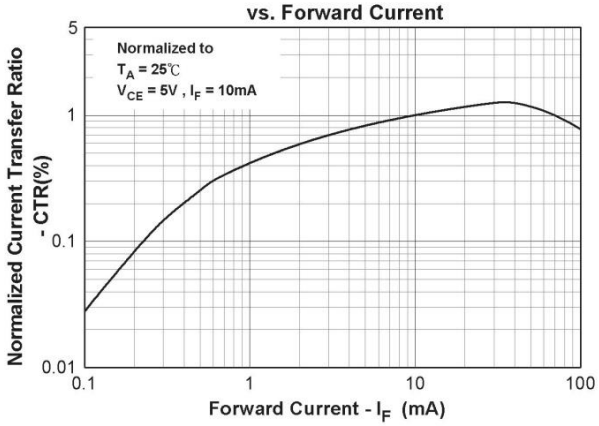

Copyright © 2010, Everlight All Rights Reserved. Release Date: Otc 19, 2018. Issue No: DPC-0000037 Rev.9

Ver.:9 Release Date:10/31/2018 狀態:Approved(正式發行)

Figure 7. Normalized Current Transfer Ratio vs. Ambient Temperature

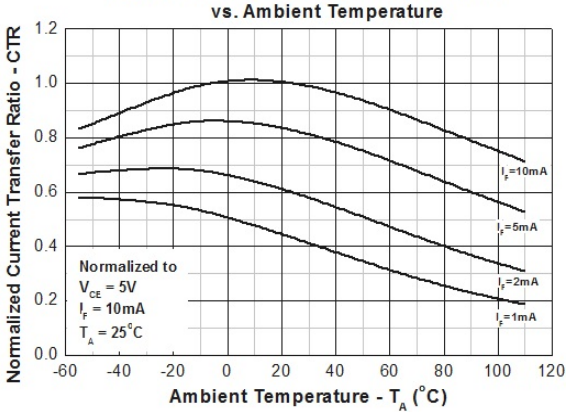

Figure 8. Normalized Current Transfer Ratio vs. Ambient Temperature

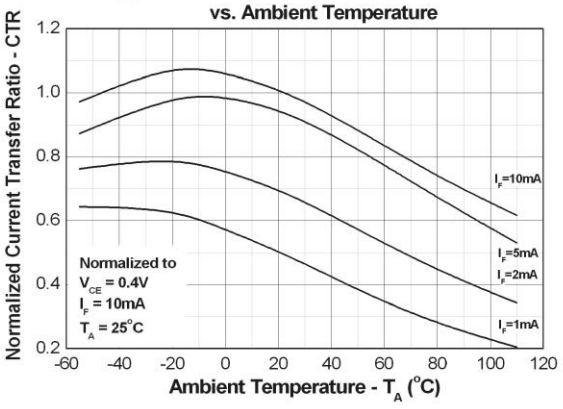

Figure 9. Turn on/off Time vs. Collector Current

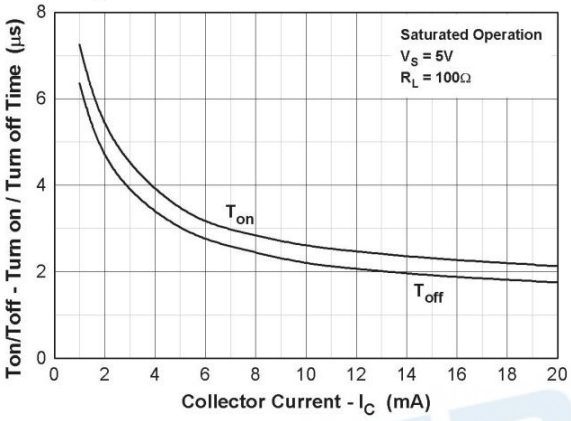

Figure 10. Turn on/off Time vs. Forward Current

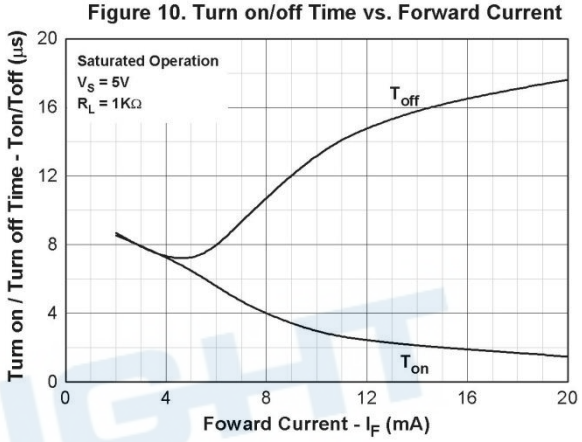

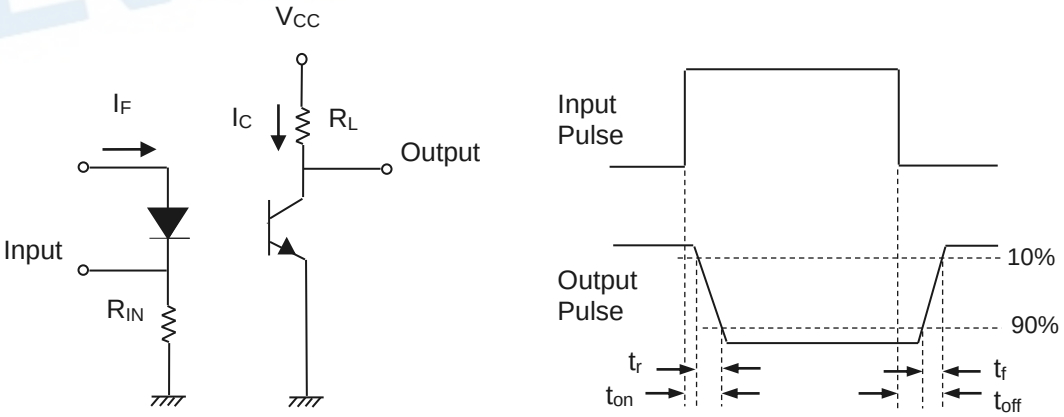

Figure 11. Switching Time Test Circuit & Waveforms

Copyright © 2010, Everlight All Rights Reserved. Release Date: Otc 19, 2018. Issue No: DPC-0000037 Rev.9
Ver.:9 Release Date:10/31/2018 狀態:Approved(正式發行)

Order Information

Part Number

EL101X(Y)-VG

Notes

EL101 = Part No.
X = CTR Rank (0, 2, 3, 4, 7, 8 or 9)
Y = Tape and reel option (TA, TB or none)
V = VDE safety (optional)
G = Halogens free

Option	Description	Packing quantity
None	Standard SMD option	100 units per tube
-V	Standard SMD option + VDE	100 units per tube
(TA)	TA Tape & reel option	3000 units per reel
(TB)	TB Tape & reel option	3000 units per reel
(TA)-V	TA Tape & reel option + VDE	3000 units per reel
(TB)-V	TB Tape & reel option + VDE	3000 units per reel

Copyright © 2010, Everlight All Rights Reserved. Release Date: Otc 19, 2018. Issue No: DPC-0000037 Rev.9
Ver.:9 Release Date:10/31/2018 狀態:Approved(正式發行)

Package Dimension (Dimensions in mm)

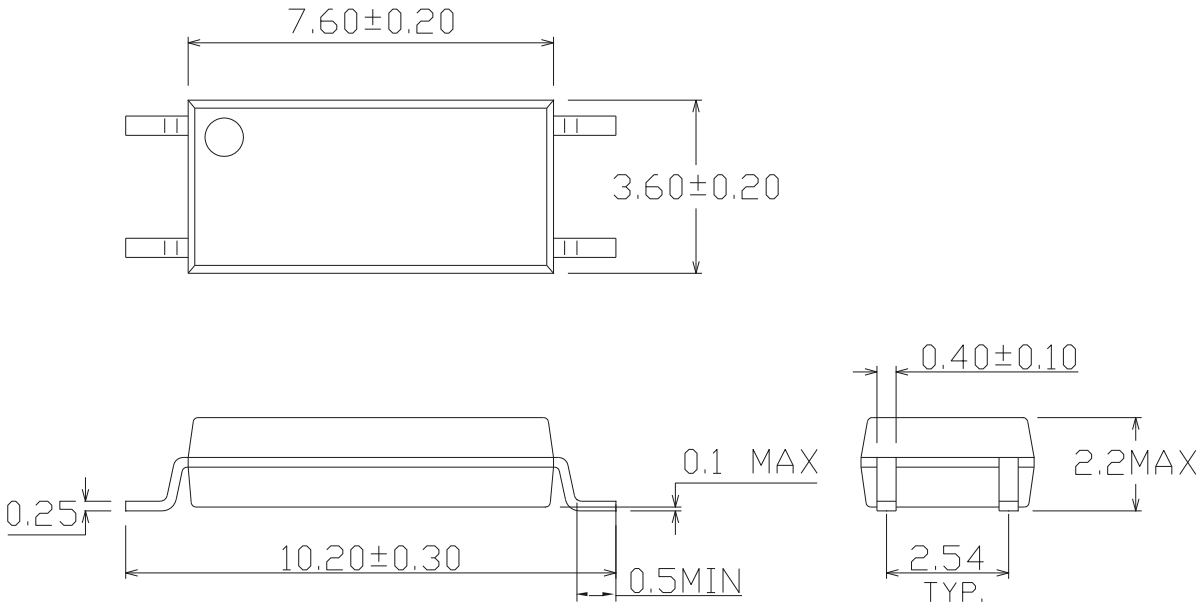

Recommended pad layout for surface mount leadform

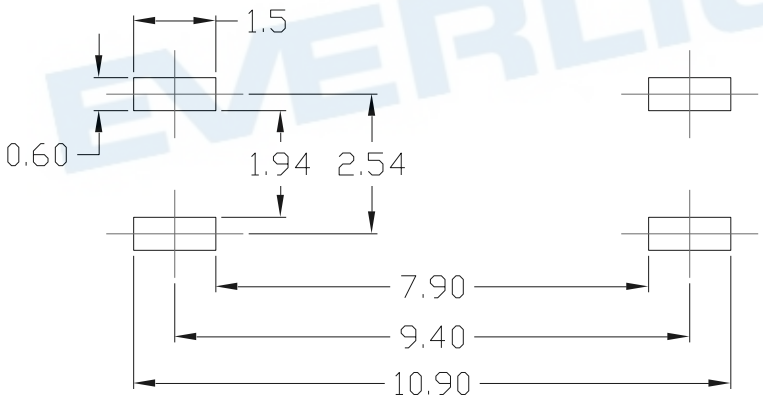

Notes

Suggested pad dimension is just for reference only.
Please modify the pad dimension based on individual need.

Copyright © 2010, Everlight All Rights Reserved. Release Date: Otc 19, 2018. Issue No: DPC-0000037 Rev.9

Ver.:9 Release Date:10/31/2018 狀態:Approved(正式發行)

Device Marking

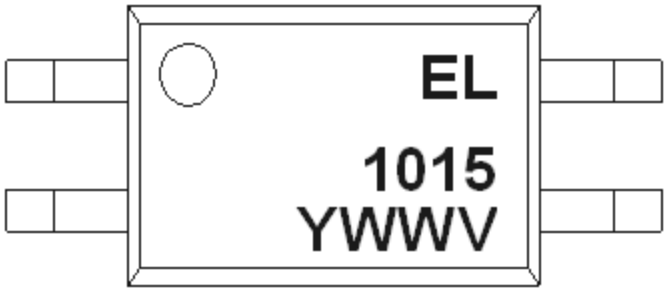

Notes

EL	denotes Everlight
1015	denotes Device Number
Y	denotes 1 digit Year code
WW	denotes 2 digit Week code
V	denotes VDE (optional)

EVERLIGHT

Copyright © 2010, Everlight All Rights Reserved. Release Date: Otc 19, 2018. Issue No: DPC-0000037 Rev.9
Ver.:9 Release Date:10/31/2018 狀態:Approved(正式發行)

Tape & Reel Packing Specifications

Option TA

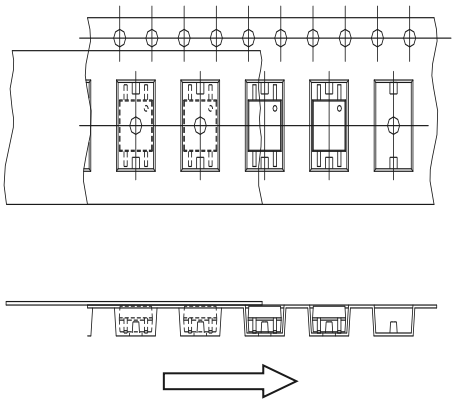

Direction of feed from reel

Option TB

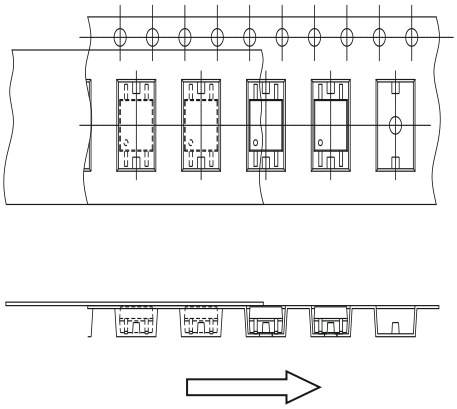

Direction of feed from reel

Tape dimensions

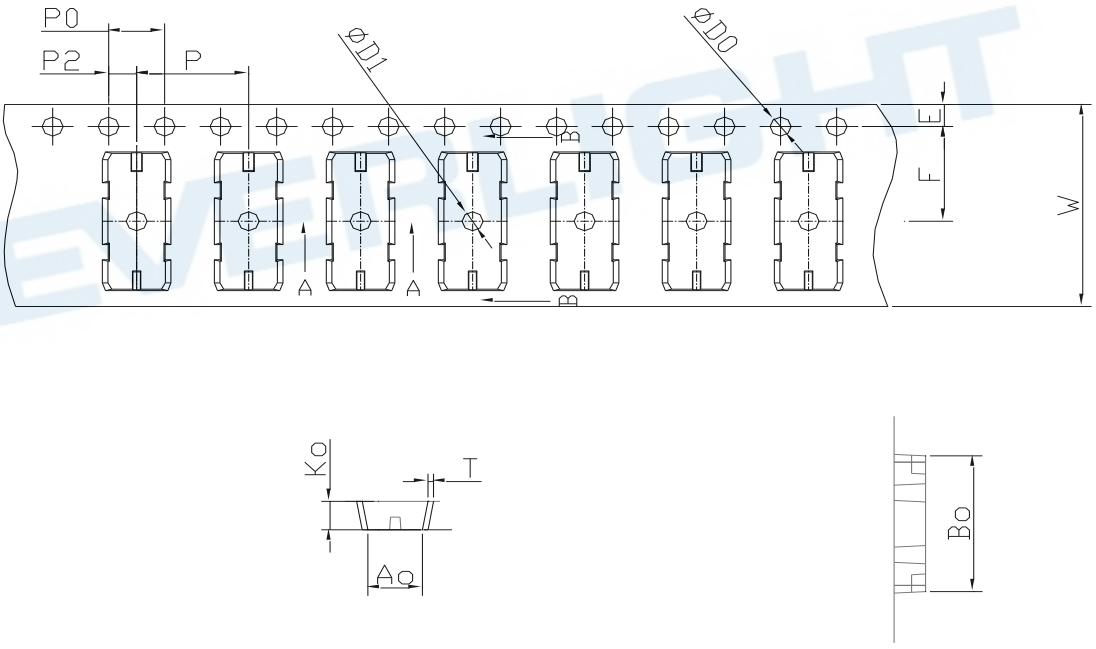

Dimension No.	**Ao**	**Bo**	**Do**	**D1**	**E**	**F**
Dimension (mm)	3.9 ± 0.10	10.82 ± 0.10	1.5 ± 0.10	1.5 ± 0.10	1.75 ± 0.10	7.5 ± 0.10
Dimension No.	**Po**	**P**	**P2**	**T**	**W**	**Ko**
Dimension (mm)	4.0 ± 0.10	8.0 ± 0.10	2.0 ± 0.10	0.4 ± 0.05	16.0 ± 0.30	2.25 ± 0.10

Copyright © 2010, Everlight All Rights Reserved. Release Date: Otc 19, 2018. Issue No: DPC-0000037 Rev.9
Ver.:9 Release Date:10/31/2018 狀態:Approved(正式發行)

Precautions for Use

1. Soldering Condition

1.1 (A) Maximum Body Case Temperature Profile for evaluation of Reflow Profile

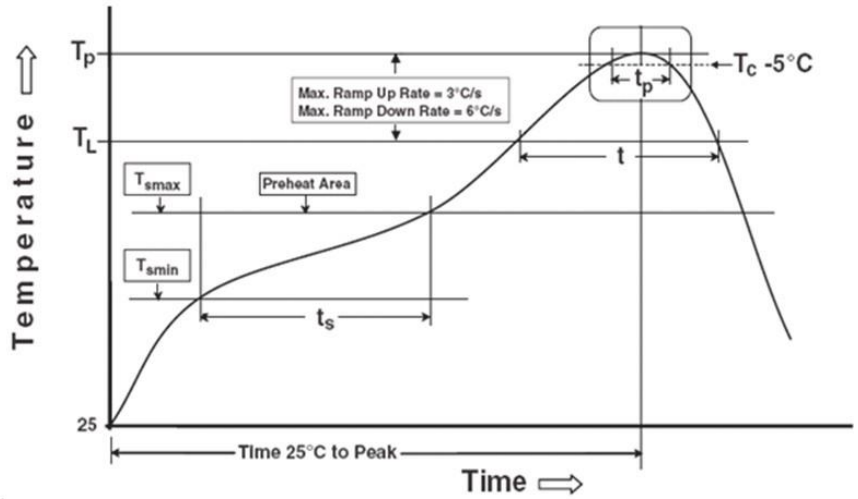

Notes	Reference: IPC/JEDEC J-STD-020D
Preheat	
Temperature min (T_{smin})	150 °C
Temperature max (T_{smax})	200°C
Time (T_{smin} to T_{smax}) (t_s)	60-120 seconds
Average ramp-up rate (T_{smax} to T_p)	3 °C/second max
Other	
Liquidus Temperature (T_L)	217 °C
Time above Liquidus Temperature (t_L)	60-100 sec
Peak Temperature (T_P)	260°C
Time within 5 °C of Actual Peak Temperature: T_P - 5°C	30 s
Ramp- Down Rate from Peak Temperature	6°C /second max.
Time 25°C to peak temperature	8 minutes max.
Reflow times	3 times

.

Copyright © 2010, Everlight All Rights Reserved. Release Date: Otc 19, 2018. Issue No: DPC-0000037 Rev.9
Ver.:9 Release Date:10/31/2018 狀態:Approved(正式發行)

DISCLAIMER

1. Above specification may be changed without notice. EVERLIGHT will reserve authority on material change for above specification.
2. The graphs shown in this datasheet are representing typical data only and do not show guaranteed values.
3. When using this product, please observe the absolute maximum ratings and the instructions for use outlined in these specification sheets. EVERLIGHT assumes no responsibility for any damage resulting from use of the product which does not comply with the absolute maximum ratings and the instructions included in these specification sheets.
4. These specification sheets include materials protected under copyright of EVERLIGHT. Reproduction in any form is prohibited without the specific consent of EVERLIGHT.
5. This product is not intended to be used for military, aircraft, automotive, medical, life sustaining or life saving applications or any other application which can result in human injury or death. Please contact authorized Everlight sales agent for special application request.
6. Statements regarding the suitability of products for certain types of applications are based on Everlight's knowledge of typical requirements that are often placed on Everlight products in generic applications. Such statements are not binding statements about the suitability of products for a particular application. It is the customer's responsibility to validate that a particular product with the properties described in the product specification is suitable for use in a particular application. Parameters provided in datasheets and/or specifications may vary in different applications and performance may vary over time. All operating parameters, including typical parameters, must be validated for each customer application by the customer's technical experts. Product specifications do not expand or otherwise modify Everlight's terms and conditions of purchase, including but not limited to the warranty expressed therein.

Copyright © 2010, Everlight All Rights Reserved. Release Date: Otc 19, 2018. Issue No: DPC-0000037 Rev.9

Ver.:9 Release Date:10/31/2018 狀態:Approved(正式發行)